EN WO2001/2/3/4/-1
Linkable LED linear lighting

Thank you for purchasing our equipment. Please read this manual carefully and heed the safety warnings and instructions before installing, using or repairing the equipment. This will ensure not only the protection of persons, but also the long life of the equipment. The lighting can be hung, attached to the wall and ceiling, or built into the ceiling. Lights up to 1000W can be interconnected and powered. The luminaires can be interconnected by means of built-in tiltable connectors at an angle of 90°-270°. Installation must only be carried out by a qualified technician.

TECHNICAL PARAMETERS

Product code	WO2001	WO2001-1	WO2002	WO2002-1	WO2003	WO2003-1	WO2004	WO2004-1
Input voltage	AC170-265V		AC170-265V		AC170-265V		AC170-265V	
Power cons.	24W		36W		50W		60W	
Luminous flux	2280lm		3420lm		4750lm		5700lm	
Chromaticity	4000K	*3000/4000/6000K	4000K	*3000/4000/6000K	4000K	*3000/4000/6000K	4000K	*3000/4000/6000K
IP rating	IP20		IP20		IP20		IP20	
Dimensions	600 x 55 x 55 mm		900 x 55 x 55 mm		1200 x 55 x 55 mm		1500 x 55 x 55 mm	

* The WO2001-1, WO2002-1, WO2003-1 and WO2004-1 luminaires are equipped with a colour temperature switch on the top of the unit. Use the switch to select the desired colour temperature.

NOTICE

The installation kit is not included, it must be purchased separately. It can be found at www.solight.cz by searching for WO2000-ND1, WO2000-ND2, WO2000-ND3 and WO2000-ND4.

INSTALLATION BY HANGING

Switch off the power supply before installation!

1. Insert the dowels into the pre-drilled holes.
2. Insert the top screw fixing into the ceiling base and tighten it with the nut.
3. Thread the wider side of the lower screw grip onto the wire.
4. Attach the narrow side of the wire to the ceiling base by sliding the cable into the top screw mount. (To release the cable, push the narrow part of the top screw mount upwards and pull the cable out.
5. Screw the flat head screw to the lower screw mount.
6. Slide the flat screw into the groove on the top of the luminaire and tighten it at the chosen location.
7. Pull the supply cable through the base.
8. Drill the base to the ceiling.
9. Connect the supply cables and make sure that the wiring is correct.
10. Connect the supply cable to the luminaire.

Repeat the same procedure for the second set to be hung.

NOTE:
Cover unused power inputs with a cover.

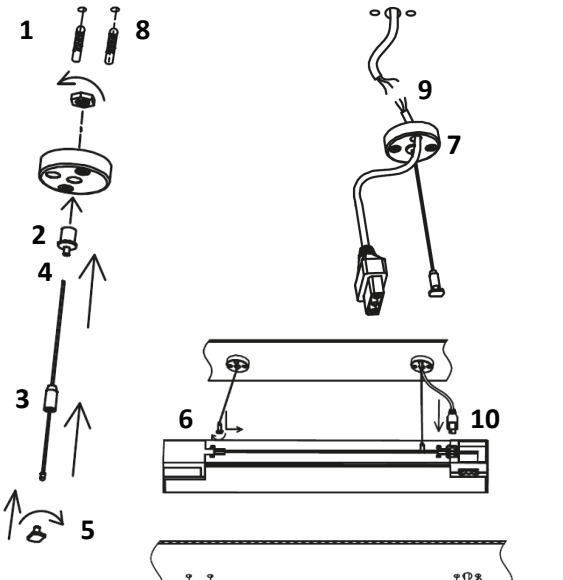

INSTALLATION BY ATTACHING TO THE CEILING

Switch off the power supply before installation!

1. Insert the dowels into the pre-drilled holes.
2. Drill the securing clamps.
3. Put the luminaire on the securing clamps.
4. Connect the supply cables.
5. Connect the supply cable to the luminaire.

NOTE:
Cover unused power inputs with a cover.

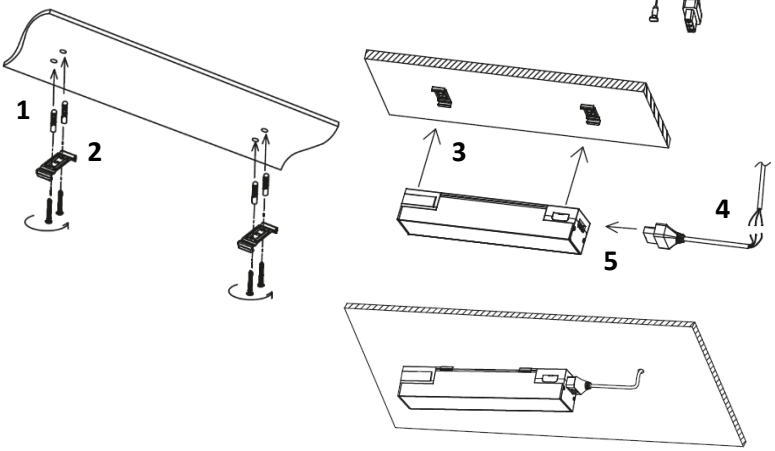

INSTALLATION BY RECESSING

Switch off the power supply before installation!

1. Place the washer on the bolt and tighten it with the nut to leave a space of a few millimetres on the underside.
2. Insert the screw head into the groove on the top of the luminaire and tighten the nut.
3. Place the spreader clips and washer on the bolt and tighten with the nut at the required height.
4. Insert the device into the ceiling and secure the clamps.
5. Connect the supply cables and connect the supply cable to the luminaire.

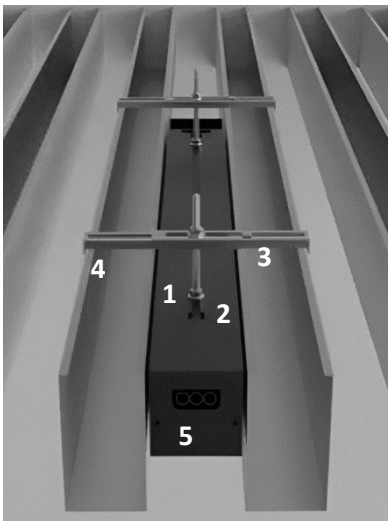

NOTE:
Cover unused power inputs with a cover.

CONNECTION OF LUMINAIRES

NOTE: If you are connecting luminaires in a closed shape (circle, rectangle, etc.), the connection of **the last** and **first** luminaire must be via a connector marked "DUMMY" 

, which has no electrical guides inside. Otherwise there is a risk of short circuit.

Disconnect the power supply before striking the connection!

Using the connectors  , luminaires up to 1000W can be connected and powered.

ILLUSTRATION OF RIGHT AND WRONG CONNECTIONS

1.

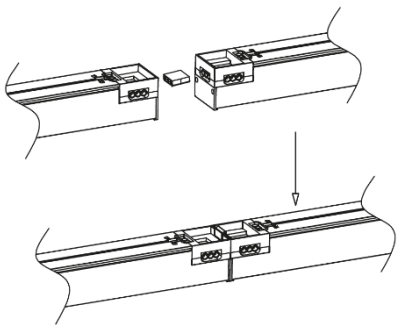

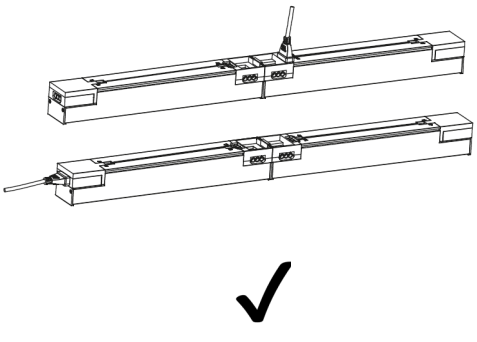

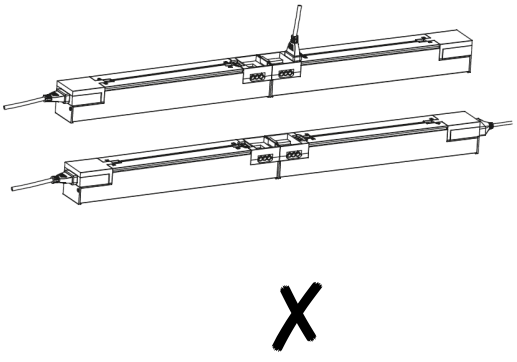

2.

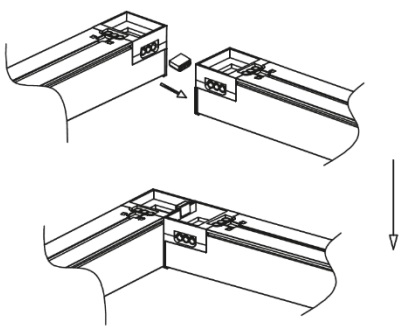

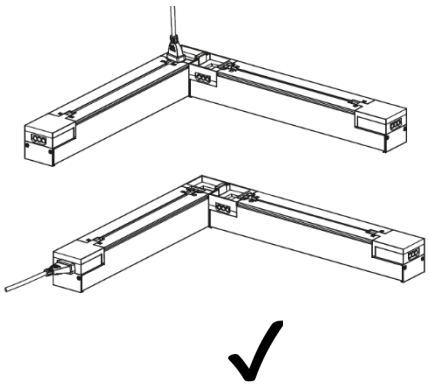

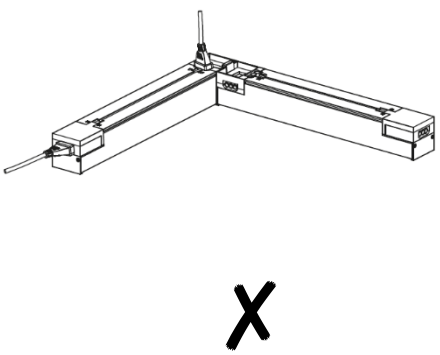

3.

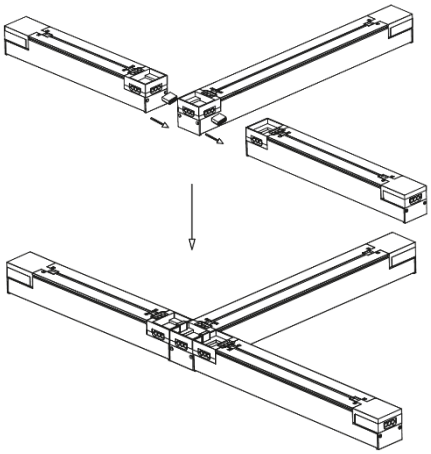

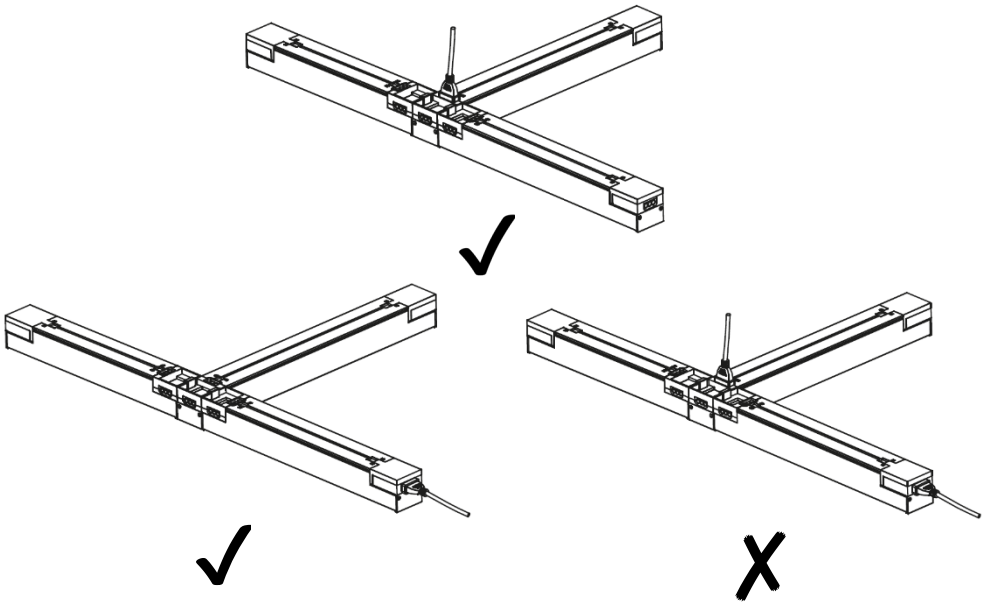

4.

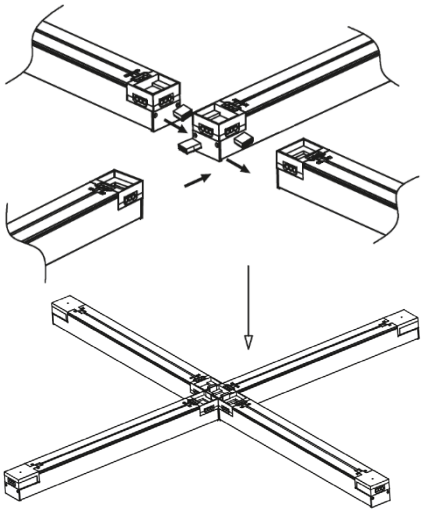

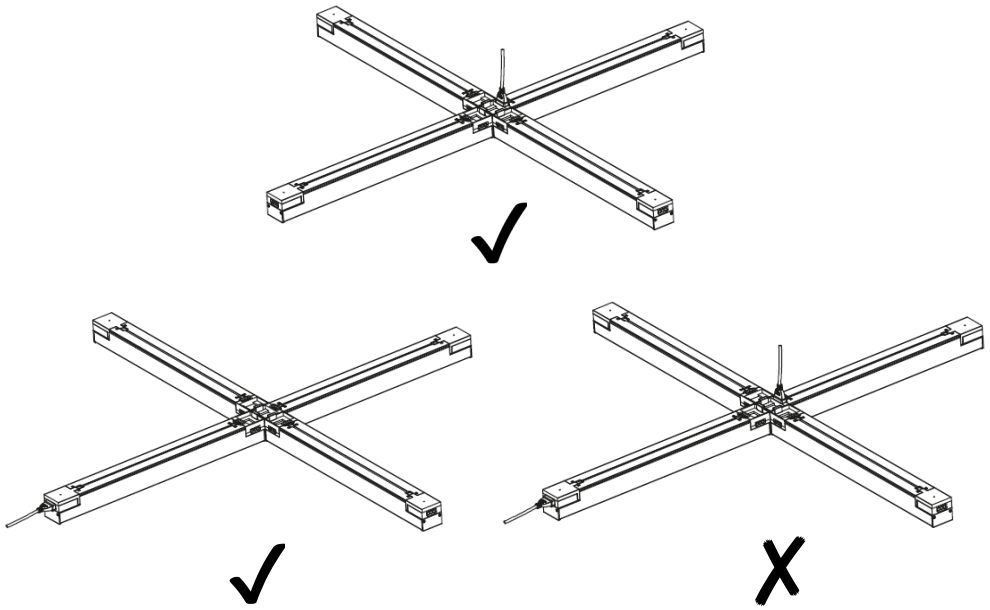

5.

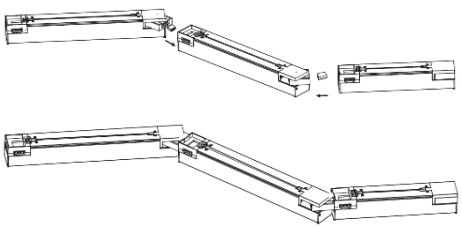

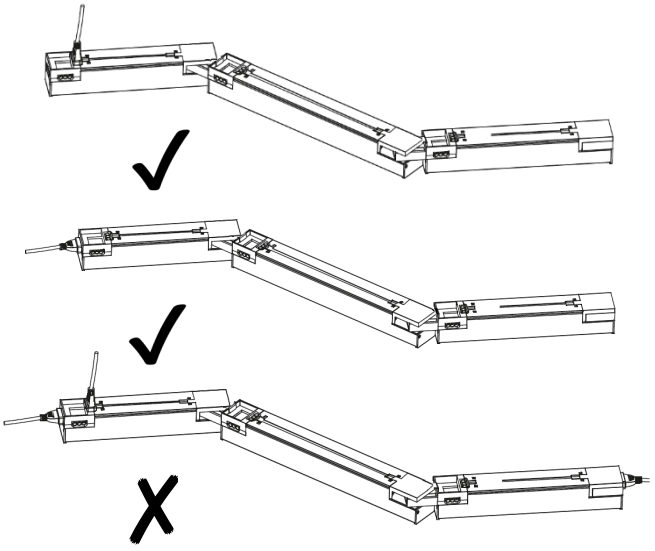

6.

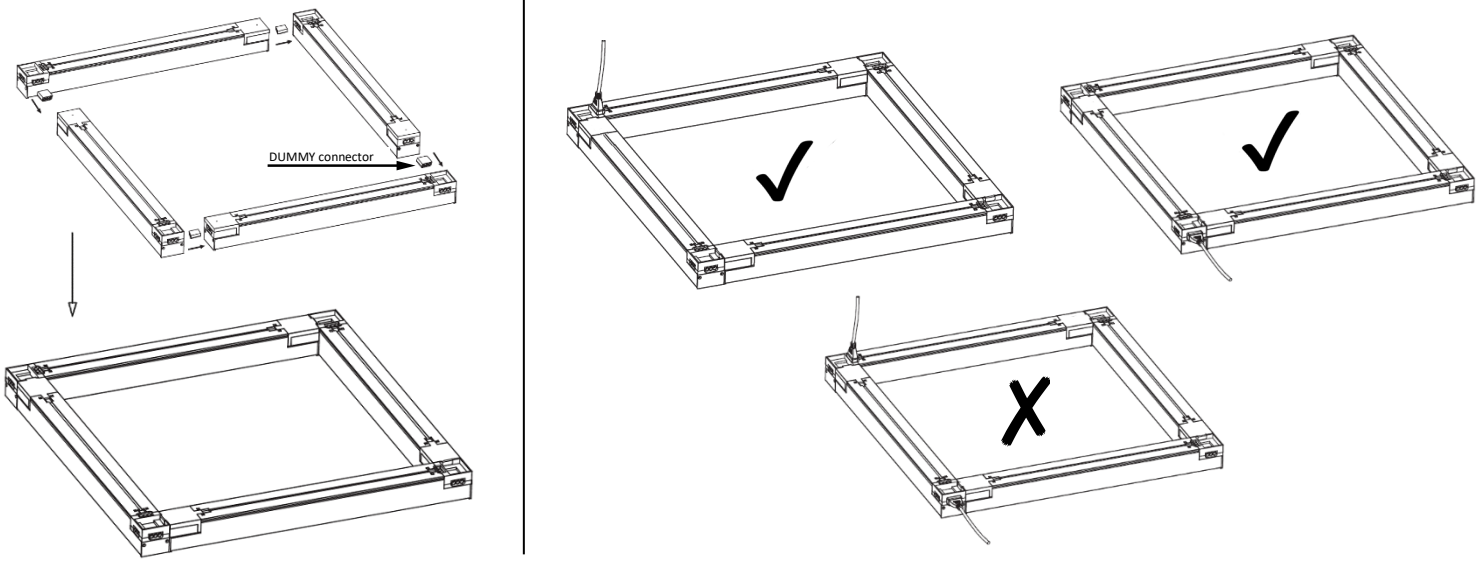

7.

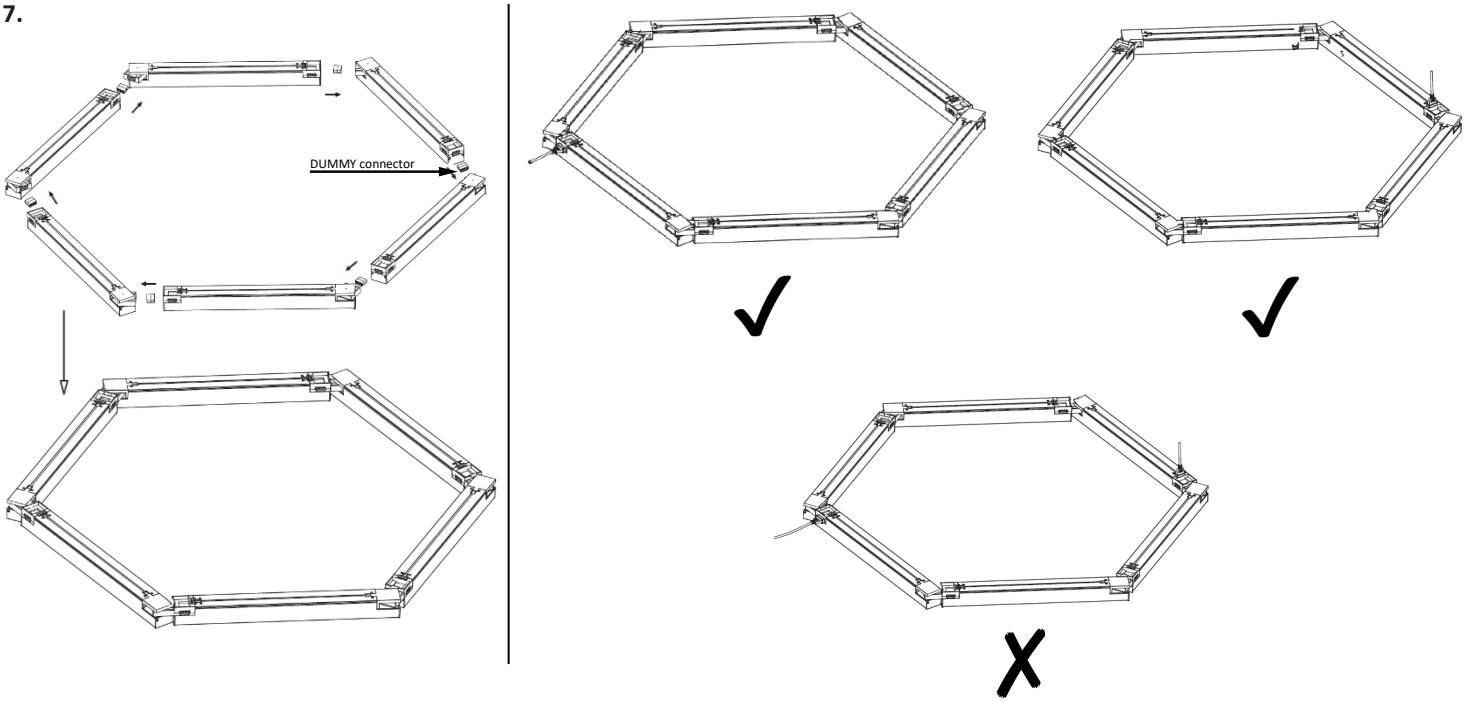

The light source of this luminaire is non-replaceable, at the end of its service life the entire luminaire must be replaced and disposed of in a designated place. This product contains a light source that for design reasons cannot be removed for verification and therefore the entire product is considered a light source. The supply cable cannot be replaced if damaged, the device must no longer be used.

The product has been issued with a CE declaration of conformity in accordance with the applicable regulations.
On request from the manufacturer: info@solight.cz, or downloadable from www.solight.cz/en.

SOLIGHT

Solight Holding, s.r.o., Na Brně 1972, Hradec Králové 500 06, Czech Republic.